LIFT CHECK VALVE 600#

1/2", 3/4", 1", 1-1/2", 2"

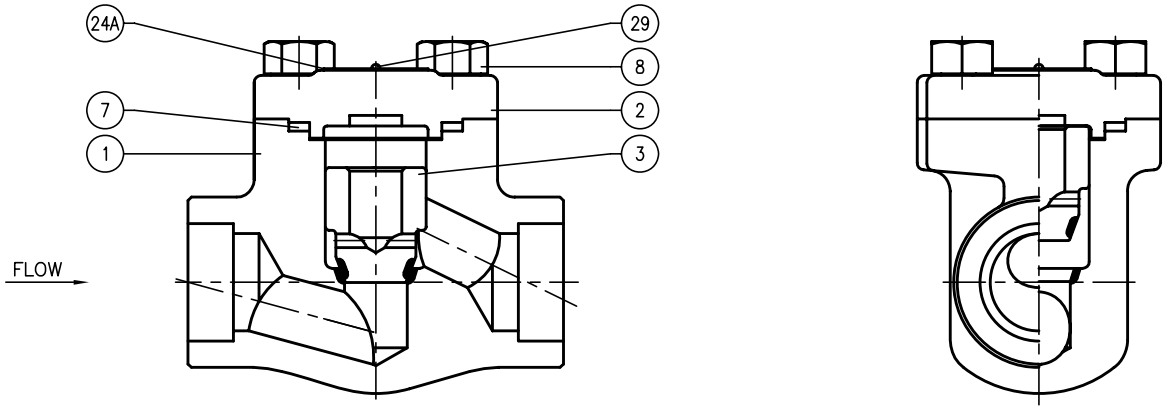

PARTS LIST								
ITEM	DESCRIPTION	Q'TY	A105	**A182-F11**	**A182-F22**	**A182-F91**	**A182-F304**	**A182-F316**
1	BODY	1	A105	A182-F11	A182-F22	A182-F91	A182-F304	A182-F316
2	BONNET	1	A105	A182-F11	A182-F22	A182-F91	A182-F304	A182-F316
3	DISC	1	A276-410				A276-304	A276-316
7	GASKET	1	SS304+GRAPHITE					
8	BONNET BOLT	4	A193-B7				A193-B8	A193-B8
24A	NAMEPLATE	1	ALUMINUM					
24B	TAG PLATE	1	ALUMINUM					
29	RIVET	1	BRASS					

CHECK VALVE 1500#, 2500#

1/2", 3/4", 1", 1-1/2", 2"

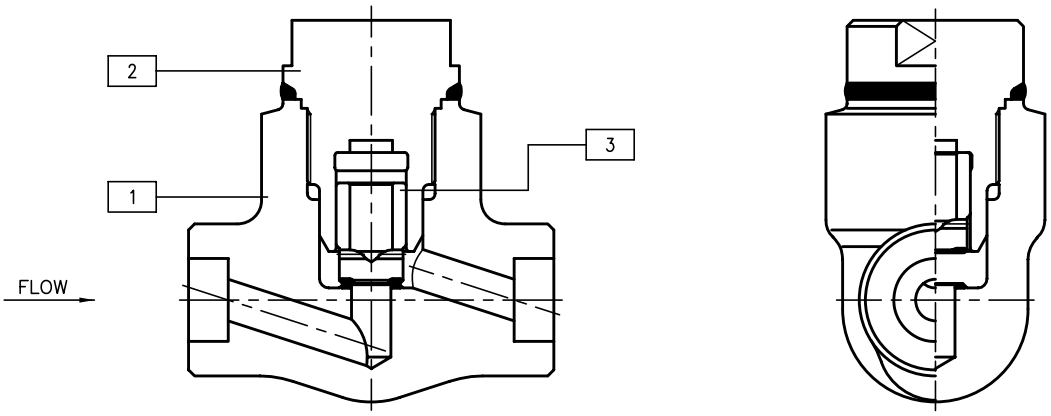

PARTS LIST								
ITEM	DESCRIPTION	Q'TY	A105	**A182-F11**	**A182-F22**	**A182-F91**	**A182-F304**	**A182-F316**
1	BODY	1	A105	A182-F11	A182-F22	A182-F91	A182-F304	A182-F316
2	BONNET	1	A105	A182-F11	A182-F22	A182-F91	A182-F304	A182-F316
3	DISC	1	A276-410	A182-F11	A182-F22	A182-F91	A182-F304/A351-CF8	A182-F316/A351-CF8M
24	NAMEPLATE	1	ALUMINUM					