GLOBE VALVE 600#

1/2", 3/4", 1", 1-1/2", 2"

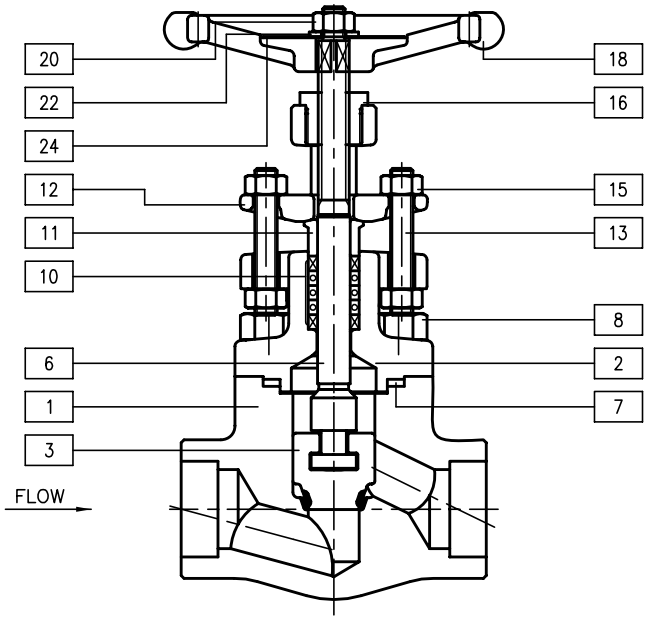

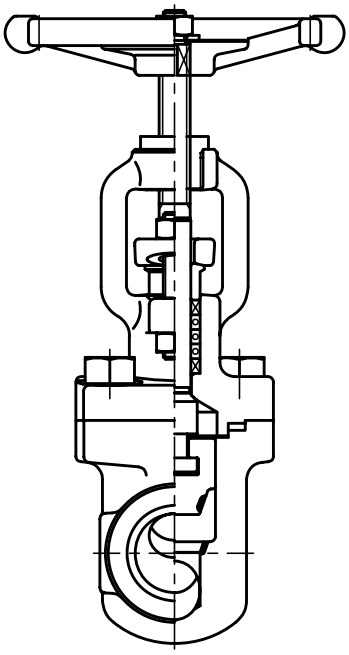

PARTS LIST								
ITEM	DESCRIPTION	Q'TY	A105	**A182-F11**	**A182-F22**	**A182-F91**	**A182-F304**	**A182-F316**
1	BODY	1	A105	A182-F11	A182-F22	A182-F91	A182-F304	A182-F316
2	BONNET	1	A105	A182-F11	A182-F22	A182-F91	A182-F304	A182-F316
3	DISC	1	A743-CA40				A351-CF8	A351-CF8M
6	STEM	1	A276-410				A276-304	A276-316
7	GASKET	1	SS304+GRAPHITE					
8	BONNET BOLT	4	A193-B7				A193-B8	A193-B8
10	GLAND PACKING (ENDS)	2	BRAIDED GRAPHITE					
	GLAND PACKING (INTER.)	3	MOLDED GRAPHITE					
11	GLAND	1	A276-410				A276-304	A276-304
12	GLAND FLANGE	1	A105				A182-F304	A182-F304
13	GLAND BOLT	2	A276-304				A276-304	A276-304
15	GLAND BOLT NUT	4	A194-2H				A194-8	A194-8
16	SLEEVE	1	A276-410					
18	HANDWHEEL	1	A197					
20	HANDWHEEL NUT	1	A108-1020					
22	HAND. WASHER	1	A108-1020					
24	NAMEPLATE	1	ALUMINUM					

GLOBE VALVE 1500#, 2500#

1/2", 3/4", 1", 1-1/2", 2"

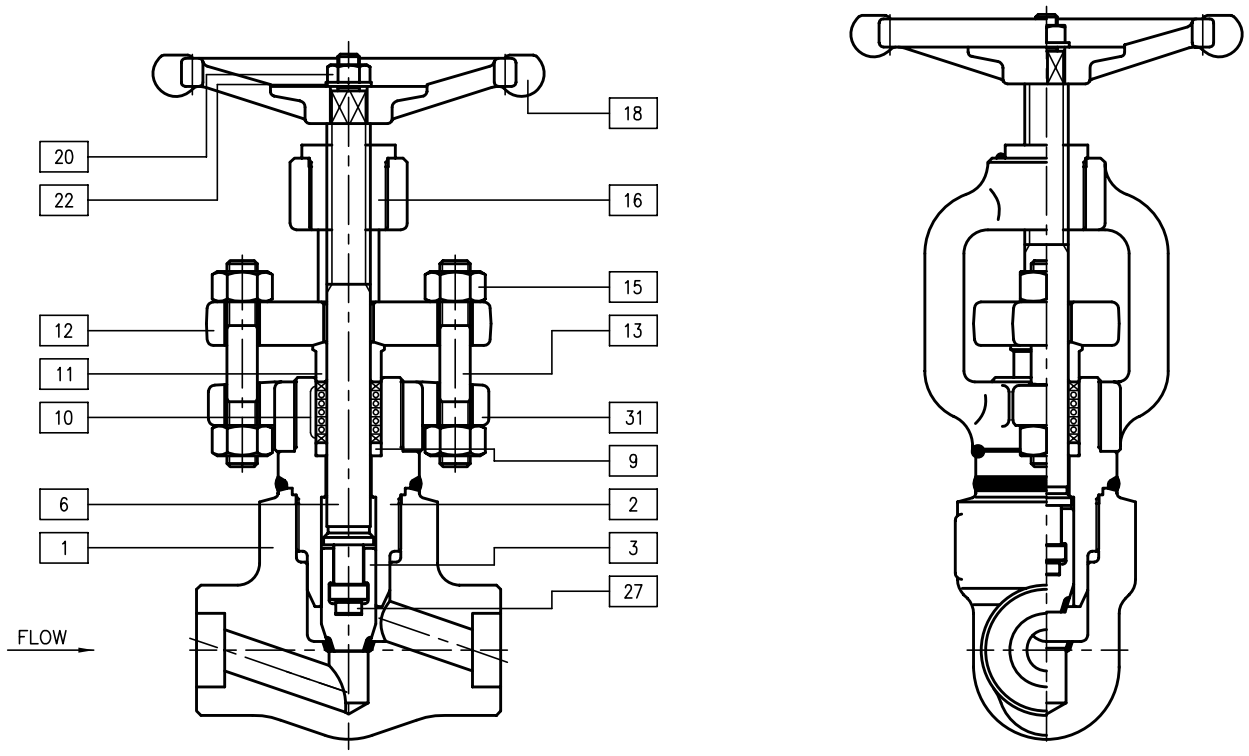

PARTS LIST								
ITEM	DESCRIPTION	Q'TY	A105	**A182-F11**	**A182-F22**	**A182-F91**	**A182-F304**	**A182-F316**
1	BODY	1	A105	A182-F11	A182-F22	A182-F91	A182-F304	A182-F316
2	BONNET	1	A105	A182-F11	A182-F22	A182-F91	A182-F304	A182-F316
3	DISC	1	A105	A182-F11	A182-F22	A182-F91	A351-CF8	A351-CF8M
6	STEM	1	A276-410					
9	PACKING WASHER	1	A276-410					
10	GLAND PACKING (ENDS)	2	BRAIDED GRAPHITE					
	GLAND PACKING (INTER.)	4	MOLDED GRAPHITE					
11	GLAND	1	B584-C86700				A276-304	A276-304
12	GLAND FLANGE	1	A105				A182-F304	A182-F304
13	GLAND BOLT	2	A193-B7				A276-304	A276-304
15	GLAND BOLT NUT	4	A194-2H				A194-8	A194-8
16	SLEEVE	1	B584-C86700					
18	HANDWHEEL	1	A197/A536					
20	HANDWHEEL NUT	1	A108-1020					
22	HAND. WASHER	1	A108-1020					
24	NAMEPLATE	1	ALUMINUM					
27	DISC CENTER	1	A276-420					
31	YOKE	1	A105/A216-WCB				A182-F304/A351-CF8	A182-F316/A351-CF8M

GLOBE VALVE 4500#

1/2", 3/4", 1", 1-1/2", 2"

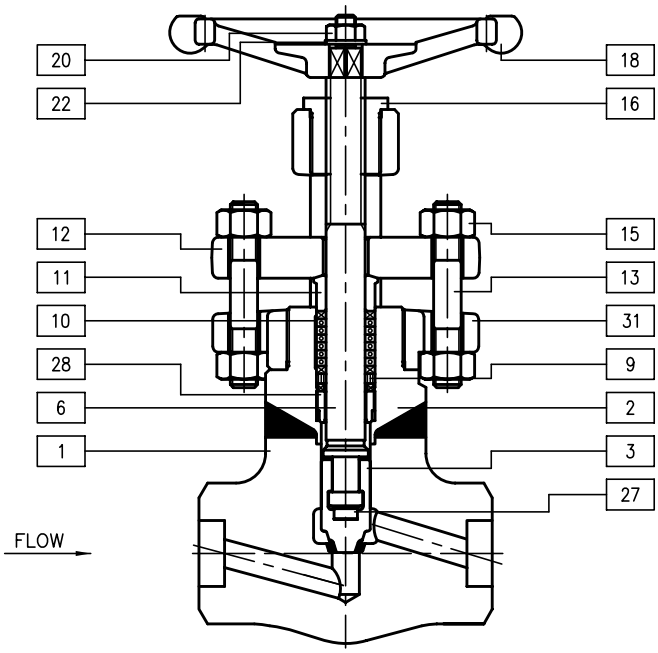

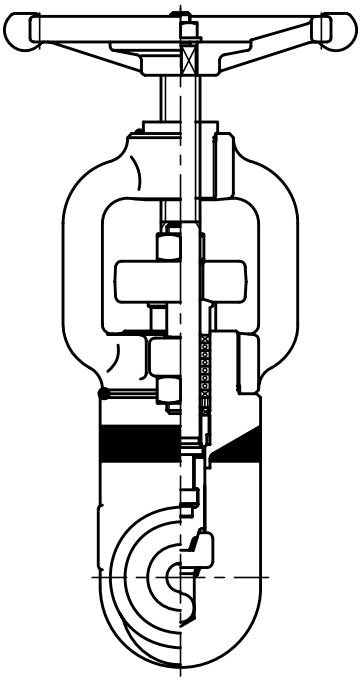

PARTS LIST								
ITEM	DESCRIPTION	Q'TY	A105	**A182-F11**	**A182-F22**	**A182-F91**	**A182-F304**	**A182-F316**
1	BODY	1	A105	A182-F11	A182-F22	A182-F91	A182-F304	A182-F316
2	BONNET	1	A105	A182-F11	A182-F22	A182-F91	A182-F304	A182-F316
3	DISC	1	A276-410	A182-F11	A182-F22	A182-F91	A351-CF8	A351-CF8M
6	STEM	1	A276-410					
9	PACKING WASHER	1	A276-410					
10	GLAND PACKING (ENDS)	2	BRAIDED GRAPHITE					
	GLAND PACKING (INTER.)	6	MOLDED GRAPHITE					
11	GLAND	1	B584-C86700				A276-304	A276-304
12	GLAND FLANGE	1	A105				A182-F304	A182-F304
13	GLAND BOLT	2	A193-B7				A276-304	A276-304
15	GLAND BOLT NUT	4	A194-2H				A194-8	A194-8
16	SLEEVE	1	B584-C86700					
18	HANDWHEEL	1	A197/A536					
20	HANDWHEEL NUT	1	A108-1020					
22	HAND. WASHER	1	A108-1020					
24	NAMEPLATE	1	ALUMINUM					
27	DISC CENTER	1	A276-420					
28	BACKSEAT BUSH	1	A276-410					
31	YOKE	1	A105/A216-WCB				A182-F304/A351-CF8	A182-F316/A351-CF8M